Item Number	Description
1	4" Thick Owens Corning™ Thermafiber® Firespan® 40 mineral wool insulation.
2	Owens Corning® Thermafiber® Safing™ 4 pcf density mineral wool Insulation. Cut to a min 4" width and stacked to a thickness which is min 25% greater than the width of linear gap between the curtain wall insulation and the edge of the concrete floor slab. The stacked forming material is compressed 20% in the thickness direction and inserted cut-edge-first into the linear gap such that its top surface is flush with the top surface of the floor assembly. A max of one tightly-butted seam is permitted between mullions.
3	Floor Assembly - Min $4\frac{1}{2}$" thick reinforced lightweight or normal weight (100-150 pcf or 1600-2400 kg/m3) structural concrete.
4	Min $\frac{1}{8}$" wet thickness of fill material spray-applied over top of forming material and lapping min $\frac{1}{2}$" onto the top surface of the floor and onto the curtain wall insulation and framing covers. When SpecSeal Fast Tack Spray is used, wet and dry thickness of spray is min $\frac{5}{64}$". SPECIFIED TECHNOLOGIES INC - SpecSeal AS200 Elastomeric Spray, SpecSeal Safing Spray or SpecSeal Fast Tack Spray

Item Number	Description
5	Stiffener Channel - One nom $2\frac{1}{2}$" wide by $\frac{7}{8}$" deep by 24 gauge (or heavier) steel hat-channel installed to span between mullions at each floor level to restrain curtain wall insulation against outward movement when forming material is installed. Stiffener channel to be cut min 4" longer than on center spacing between mullions. Ends of stiffener channel cut, flattened and bent 90 deg to form min 2" long tabs for screw-attachment to the mullions with No. 8 by 1" long self-drilling, self-tapping steel screws. Each stiffener channel shall be located with its stem centerline at an elevation 2" below the top plane of the floor.
6	Steel Hat Channels - Nom $2\frac{1}{2}$" wide by $\frac{7}{8}$" deep No. 24 gauge galvanized steel hat channel installed to span from mullion-to-mullion for attachment of curtain wall insulation. Hat channels to be cut min 4" longer than on center spacing of mullions. Ends of hat channels cut, flattened and bent 90 deg to form min 2" long tabs for screw-attachment to mullions with No. 8 by 1" long self-drilling, self-tapping steel screws. Hat channels installed max 3" above top of vision panel, max 3" above top of concrete floor and spaced max 14" O.C. When spandrel panel and horizontal transom spacing exceeds 36", the spacing of the steel hat channels may be increased to 24" O.C.
7	Min 8" wide strips cut from min 1" thick mineral wool batt insulation. Framing covers to be centered over mullions and secured to the steel hat channels with min $5\frac{1}{2}$" long steel screws. Framing covers on mullions to abut the mineral wool batt safing material above and below floor. Where more than one spandrel panel occurs between vertically separated vision panels, the horizontal transom between spandrel panels shall also be covered with an 8" wide framing cover in the same manner as on the vertical mullions. Owens Corning™ Thermafiber® Firespan® 90 mineral wool insulation.

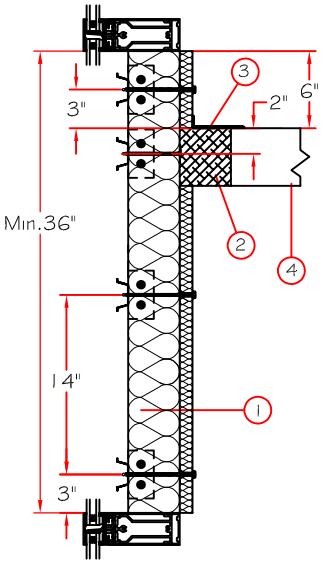

Cross Section View A-A

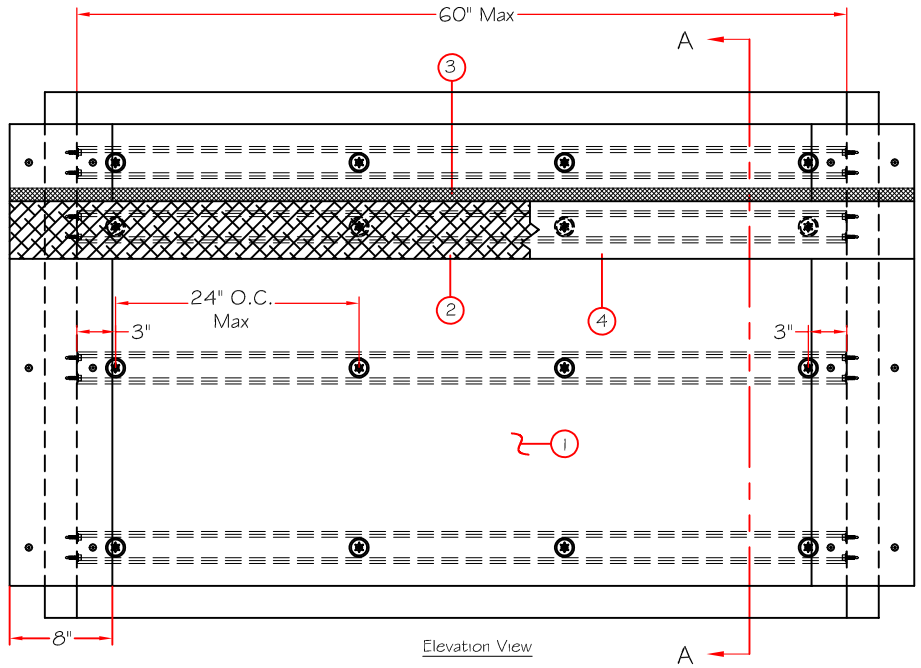

Elevation View

CONFIDENTIAL AND PROPRIETARY INFORMATION OF THERMAFIBER INC.

THESE DRAWINGS ARE THE SOLE AND EXCLUSIVE PROPERTY OF THERMAFIBER AND CONTAIN SENSITIVE, PRIVILEGED, OR CONFIDENTIAL INFORMATION WHICH MAY BE USED ONLY FOR ITS BENEFIT. THE DISCLOSURE OF THESE DRAWINGS TO UNAUTHORIZED PERSONS IN STRICTLY PROHIBITED. THIS DOCUMENT AND ALL COPIES MUST BE RETURNED ON DEMAND. NOTE: DETAILS ONLY VALID IF SPECIFIED THERMAFIBER PRODUCTS ARE INSTALLED AS SHOWN.

© COPYRIGHT THERMAFIBER INC., 2014

Date	Rev. Num.	Description

Job Name:

Location: City and State:

DRAWING NUMBER: CW-D-1010

Reference Design: CW-D-1010

DATE APRV:	Drawn By:	Dimensions	Angle	DATE:
/ /	SPR	$\pm\frac{1}{32}$"	$\pm 2°$	

OWENS CORNING® THERMAFIBER®